HOFMANN MEGAPLAN

megamount 38

AUTOMATIC TYRE CHANGER WITH LOCKING CAPACITY UP TO 28”

UP to 28”

BEAD BREAKER UP TO 15”

HPX DM

SINGLE SPEED

4.2 bar

megamount

Hofmann Megaplan tyre disassembly tool, essential but complete with all the necessary devices to allow the operator to work easily on all types of wheels. Smartly designed self-centring turntable is standard on all models.

megamount

Tyre changer with tilt-back column for easier wheel access and faster mounting/demounting operations.

megamount 38

AUTOMATIC TYRE CHANGER WITH LOCKING CAPACITY UP TO 28”

Locking capacity up to 28”

The heavy-duty turntable has a locking capacity from 9” to 28” and uses a direct clamping system, operated by 75 mm diameter cylinders, ensuring optimal clamping on all types of rim. The turntable is equipped with adjustable jaws featuring integrated plastic protection.

Bead breaker up to 15”

Ergonomic bead breaker with adjustable arm system which enables to operate on large wheels from 2” up to 15” width. Equipped with an adjustable pedal control and an anti-crushing system that prevents the bead breaker from getting trapped between the tyre and the rim.

Inflating gun

Professional tyre pressure gun with manometer.
For a tyre pressure up to max 4.2 bar.

4.2 bar

Single speed system

Single speed 230V/50-60Hz/1ph motor controlled by pedal.

SINGLE SPEED

HELPING DEVICE SYSTEM HPX-DM

The *megamount38* is supplied with HPX-DM as standard.
It is featuring a pneumatic selector for quick locking of the side roller and a dual-roller system designed to handle wheels of different sizes. Particularly suitable for working on large and extremely stiff Run-Flat and UHP tyres.

Standard accessories

Bead lever

Set of plastic protections + tyre paste and brush

Optional accessories

Plastic mounting head

Quick mounting head

Motorcycle wheel adapters

Run Flat clamp

Roller board

Wheel lift

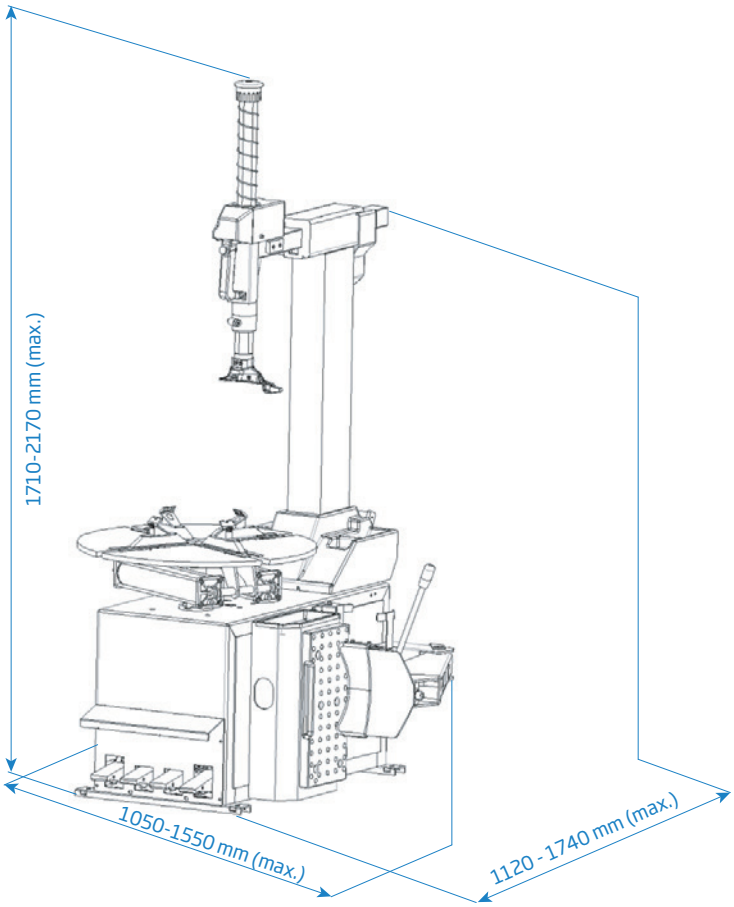

Technical data

Clamping capacity	9" - 28"
External clamping	9" - 26"
Internal clamping	11" - 28"
Max wheel diameter	1100 mm (43")
Max wheel width	390 mm (15")
Bead breaker force	15000N
Turntable speed	8 rpm
Operating pressure	8 - 10 bar (116 - 145 psi)
Noise level	< 70 ± 3 dB (A)
Net weight	270 kg (485 lbs)

HOFMANN MEGAPLAN UK
Unit 13, Brook Road, Bicton Industrial Estate, Kimbolton, PE28 0LR.
www.hofmann-megaplan.co.uk